This is a digital copy of a book that was preserved for generations on library shelves before it was carefully scanned by Google as part of a project to make the world's books discoverable online.

It has survived long enough for the copyright to expire and the book to enter the public domain. A public domain book is one that was never subject to copyright or whose legal copyright term has expired. Whether a book is in the public domain may vary country to country. Public domain books are our gateways to the past, representing a wealth of history, culture and knowledge that's often difficult to discover.

Marks, notations and other marginalia present in the original volume will appear in this file - a reminder of this book's long journey from the publisher to a library and finally to you.

Usage guidelines

Google is proud to partner with libraries to digitize public domain materials and make them widely accessible. Public domain books belong to the public and we are merely their custodians. Nevertheless, this work is expensive, so in order to keep providing this resource, we have taken steps to prevent abuse by commercial parties, including placing technical restrictions on automated querying.

We also ask that you:

+ *Make non-commercial use of the files* We designed Google Book Search for use by individuals, and we request that you use these files for personal, non-commercial purposes.
+ *Refrain from automated querying* Do not send automated queries of any sort to Google's system: If you are conducting research on machine translation, optical character recognition or other areas where access to a large amount of text is helpful, please contact us. We encourage the use of public domain materials for these purposes and may be able to help.
+ *Maintain attribution* The Google "watermark" you see on each file is essential for informing people about this project and helping them find additional materials through Google Book Search. Please do not remove it.
+ *Keep it legal* Whatever your use, remember that you are responsible for ensuring that what you are doing is legal. Do not assume that just because we believe a book is in the public domain for users in the United States, that the work is also in the public domain for users in other countries. Whether a book is still in copyright varies from country to country, and we can't offer guidance on whether any specific use of any specific book is allowed. Please do not assume that a book's appearance in Google Book Search means it can be used in any manner anywhere in the world. Copyright infringement liability can be quite severe.

About Google Book Search

Google's mission is to organize the world's information and to make it universally accessible and useful. Google Book Search helps readers discover the world's books while helping authors and publishers reach new audiences. You can search through the full text of this book on the web at `http://books.google.com/`

Library
of the
University of Wisconsin

UNIVERSITY OF WISCONSIN
No. 181
ENGINEERING LIBRARY.

TURBINE WHEELS:

ON THE

INAPPLICABILITY OF THE THEORETICAL INVESTIGATIONS OF THE TURBINE WHEEL, AS GIVEN BY RANKINE, WEISBACH, BRESSE AND OTHERS, TO THE MODERN CONSTRUCTIONS INTRODUCED BY BOYDEN AND FRANCIS.

BY

PROF. W. P. TROWBRIDGE,

Columbia College.

REPRINTED FROM VAN NOSTRAND'S MAGAZINE.

NEW YORK:

D. VAN NOSTRAND, PUBLISHER,

23 MURRAY AND 27 WARREN STREET.

1879.

16314
SVH
.T75

649787

PREFACE.

This Essay on Turbines is reprinted from Van Nostrand's Magazine, to which it was originally contributed by the author.

It clearly sets forth and corrects an important error in former treatises on Hydraulic Motors, and explains how the best practical results have been obtained by modern engineers who have discarded the formulas of the old standard works.

Editor of Magazine.

TURBINE WHEELS.

The increasing importance of the Turbine wheel as a motor, gives especial interest to everything relating to the history of its development; and although the improvements which have been introduced from time to time have been brought about by practical men in the first instance, yet the professional engineer is often called upon to investigate the merits of special designs, or to decide upon the theoretical performance of particular wheels.

To enable him to do so, it is essential for this as for all other motors, that the scientific principles of construction should be determined and introduced into text books of instruction for general information. We accordingly find full, and often tediously minute, mathematical investigations following the introduction

of the Reaction Turbine of Fourneyron, in France years ago.

The improvements in construction and design made by our own countrymen, Uriah A. Boyden and James B. Francis, marked a second period in the useful applications of the Turbine, no less important and radical in some respects than those which characterized the invention of Fourneyron. For the services thus rendered to industry, the names of Boyden and Francis deserve more universal recognition than they have yet received. My object is not, however, to assert the claims to which they are entitled, but to show, that the mathematical investigations which have been alluded to as following the introduction of the Fourneyron wheel and which are still given in text-books as the accepted expositions of the subject of Turbines, are insufficient and inapplicable to the modern constructions which are founded upon the principles introduced by Boyden and Francis.

In other words, while the Turbine wheel has been improved and its effi-

ciency greatly increased, we look in vain for suggestions which might lead to such improvements, in the treatises on Turbines, by Rankine, Weisbach, Bresse and others, which have been and are still most frequently studied for information on the subject.

Mr. James B. Francis remarks in his well known work entitled "Lowell Hydraulic Experiments" that "the turbine has been an object of deep interest to many learned mathematicians, but up to this time the results of their investigations, so far as they have been published, have afforded but little aid to Hydraulic Engineers."

How far this statement may be literally true or not, it is unnecessary to discuss: but interpreted as the conclusion of Mr. Francis, in regard to the improvements which it was his object to describe in the Lowell Hydraulic Experiments, the statement seems undeniable; because it may be shown, I think, that if Boyden and Francis had followed strictly the rules of construction, laid down in the works

which have been alluded to, they would have failed in their efforts to construct Turbines giving any considerable increase of efficiency over the old Fourneyron and Fontaine or Jonval wheels of European design and construction.

Writers on Turbines had, up to that time, insisted upon a mechanical axiom or principle of construction which, although exemplified in the Fourneyron Reaction wheel, was directly violated by Boyden and Francis in their constructions.

Their success was a sufficient demon stration of the correctness of their practice. Thus while their improvements have been universally accepted and followed, at least in this country, the student and the engineer are continually confronted with the old mathematical theories; and it is not surprising that others besides Francis have been puzzled in their efforts to apply old formulas to the newer constructions.

The theorem or axiom insisted upon by these writers was that the "water

must enter the wheel *without shock*," and hence, the mathematical condition that the *tangential velocity of the wheel, where it receives the water, and the corresponding component of the velocity of the entering water* must be equal; the effect of which is to prevent all *impulsive* effects of the entering water.

Taking the old Fourneyron wheel as an example, the buckets or floats were given a radial direction at the point where they received the water, and the relative velocities were made such by the mechanical conditions assumed, that the water entered the wheel *radially*, with a tangential component equal to the velocity of the bucket at this point. Its effects in producing *mechanical work* were thus made to depend solely upon the subsequent deviation which it experienced in passing through the wheel. This device was to avoid the *shock* of the entering water.

It is to be noted that both Rankine and Weisbach, in discussing the impulse and reaction of jets of water upon mov-

ing *vanes*, make no reservation in regard to the *shock* due to impulse, but demonstrate that water may impinge at any angle and with any relative velocity upon vanes and, by a suitable arrangement of curvature and velocities, may have all the energy destroyed; and a perfect efficiency may be obtained.

It is difficult to understand why in their discussions of the *Turbine* wheel, they insist on a different principle, and lay down a mechanical axiom at variance with these demonstrations.

The following discussion is intended to apply to the constructions introduced by Boyden and Francis, but, as will be seen in the development, the general formulas deduced are applicable to nearly all water-wheels, by making simple and proper suppositions in regard to the quantities which enter into them.

The Turbine wheel consists essentially of two rims or crowns firmly attached to an axis, numerous curved vanes or *buckets* being fixed between the crowns,

and the main stream of water which passes through the wheel is divided by guide blades, not attached to the axis, into numerous jets or smaller streams, which impinge upon these buckets simultaneously at all points of the circumference, and produce motion in the wheel.

It is sufficient, in discussing the action of the water on the wheel, to take one of these jets separately with its guide blade and bucket, inasmuch as all the jets act in the same manner.

The problem then, is to analyze the action of a single jet upon a curved bucket, and to find the mechanical work performed and the conditions of maximum efficiency.

To do this, it is proper to enumerate the axioms or theorems of the mechanics of fluids, which, are applicable to the subject, and which require no special proof. The proof of these theorems being derived from general observation and experience.

These theorems are as follows:

1*st.* When a surface moves in a given

direction under given pressures, the component pressures in all directions, except that of the motion, are neutralized, either by reciprocal actions, or by the fixed surfaces which guide the moving surface.

Therefore, in considering mechanical work done by given pressures acting upon moving surfaces, it is necessary to take into account those components only of the pressures which act in the direction of the motion, friction being neglected.

2*nd.* In whatever direction a surface be moving with reference to the earth, if a fluid moves along this surface in a direction opposite to the motion of the surface, and with a relative velocity equal to the velocity of the surface with reference to the earth, the fluid will be at rest with reference to the earth.

3*rd.* A fluid stream on striking a smooth surface, at any angle whatever, is not reflected like a solid, but flows along the surface. If the surface be fixed, and the stream be confined in a channel of uni-

form dimensions before and after striking the surface, the velocity of the stream will remain unaltered, friction not being considered.

If the surface be moving, the velocity under the same conditions after striking the surface will be the *relative* velocity of the surface and fluid before impact. If, for instance, a fluid jet impinge perpendicularly upon a plane surface moving with any velocity in the same direction, the *relative* velocity will be the difference of the two velocities and this will be the velocity with which the stream will flow along the surface.

This initial difference of velocities gives rise to a pressure due to *impulse*, the direction of the pressure being always normal to the surface at the point of impact.

4th. If the surface be curved, as in the following sketch, the same phenomena occur except that the relative velocity of the particle of the stream is not entirely destroyed until it reaches a point at which it is moving at right angles to the direction of the motion of the surface.

For example, if the stream AB impinge upon the curved surface represented in the sketch, the surface moving in the direction FM, the difference of velocities of the surface and any particle will be wholly destroyed when the particle reaches the point F, the whole effect up to this point is one of *impulse* and is the same as if the stream impinged directly upon the surface at F and was deviated instantaneously at right angles to the motion FM.

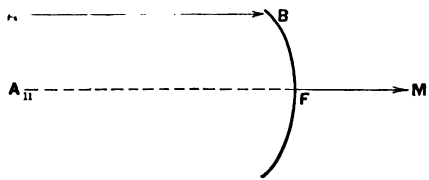

5*th*. After the particle passes the point F it flows along the curved surface without any further change of relative velocity; a change of curvature, having no effect to change the velocity of *flow relatively to the surface.*

A change of curvature, however, causes a change of *direction* of the motion of

the fluid with reference to the motion of the surface and the reaction of the fluid or resistance which it offers to this change, produces a pressure, the pressure due to *reaction.*

If a fluid *vein*, having a fixed direction and velocity with reference to the earth, impinge upon a surface which also has a motion with reference to the earth, the energy imparted to the surface may thus be separated into two parts: that due to the *impulse* and that due to *reaction.* The effect of impulse may be represented by the expression $\overline{M.x.u.}$, in which M is the mass of fluid striking the surface in one second, x the relative velocity in the direction of the motion of the surface, *i.e.*, the difference between the velocity of the surface and the component of the velocity of the fluid in the same direction.

The second effect, due to reaction, results from the deviations which the particles of the fluid vein undergo while in contact with the surface, after they have attained the velocity of the surface.

This effect is measured by an expression precisely similar to the first, viz., Mx_1u, in which M is the mass, as before, x_1 the relative velocity *imparted* to the fluid in a direction opposite to the motion, and u the velocity of the surface. The total effect being

$$W = M(xu + x_1u)$$

This being the energy in foot-pounds imparted to the surface.

If all the energy of the vein is destroyed so that it comes to rest with reference to the earth, it is evident that x_1 must then be equal in amount, and directly opposite to u, and the efficiency of such an arrangement will be unity; that is, all the energy of the fluid stream will be transferred to the surface, and we shall have

$$W = M\ (xu + x_1u) = \frac{Mv_1^2}{2}$$

$$E = 1$$

v_1 being the velocity of the fluid with reference to the earth before striking the surface.

If there is no effect from impulse, the relative velocity of the particles of the fluid vein and the surface in the direction of the motion of the surface must be zero—or $x=o$.

The whole effect produced must then be from reaction, and it is evident that for an absolute maximum of effect, Mx_1u must be equal to

$$\frac{Mv_1^2}{2} \text{ or } x_1\, u = \frac{v_1^2}{2}.$$

If the surface be a plane surface, so that there is no deviation of the vein after it strikes the surface, the whole effect will be due to impulse, and $W = M.x.u$, will be the total work performed, or the total energy imparted to the surface.

These three general cases,

$W=M(ux+x_1u)$. impulse and reaction,

$W=Mx_1u$ . . . reaction,

$W=Mxu$ . . . impulse,

explain the whole theory of the action of a stream of water, or of multiple streams

in producing motion in water-wheels; not including, however, those cases in which water acts by its weight. In these cases, the first expression may be applied by substituting for the expression representing reaction, $\overline{M\ x_1\ u}$, a form of expression representing the action of weight falling through a given distance, and the expression

$$W = M(xu + Wh)$$

will be the general expression for the energy of Overshot and Breast wheels, W being the weight of water entering the wheel in one second, $\overline{M\,x\,u}$ being the work of impulse of the water entering the buckets and h the height of fall.

Nearly all modern turbine wheels are constructed after one of three types, or of some combination of these types. They are illustrated in the following sketches, and usually receive the designations of

Outward flow wheels,
Inward flow wheels, or center vent wheels.
Parallel flow wheels.

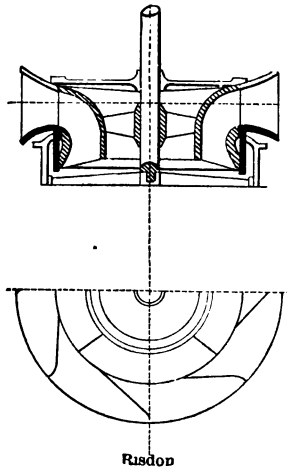
Rusdop

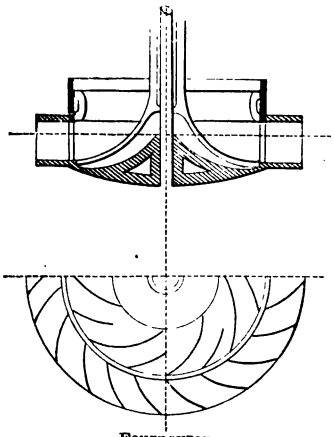

Fourneyron

No.
ENGINEERING LIBRARY

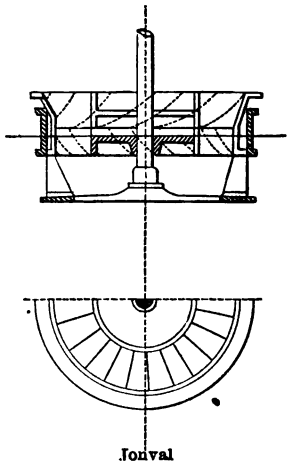

Jonval

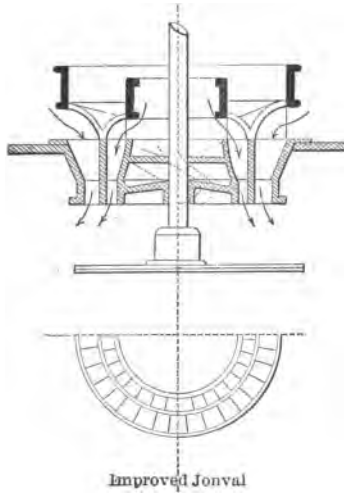

Improved Jonval

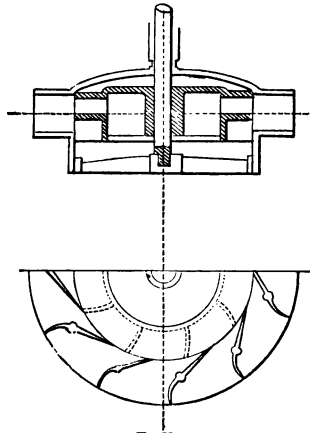

Leffel

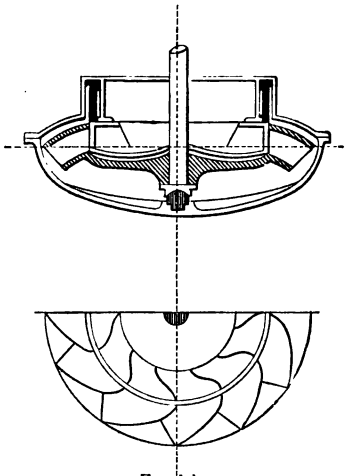

Excelsior

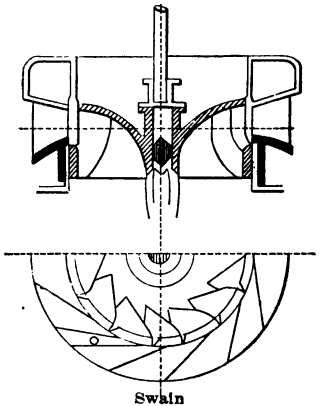

Swain

In the outward flow wheel of which the Fourneyron reaction wheel is the earliest type, the water flows usually downward through a tube or conduit, and is diverted by fixed guide blades in an outward direction, or from the axis of motion; the form of the fixed guides giving the water a tangential whirl as it enters the wheel.

In the inward flow, the water flows first in the direction of the axis, usually downward, and is then diverted by fixed guide blades inwardly, or toward the axis of motion, the same fixed guides giving the water, as before, a tangential whirl as it enters the wheel.

In the parallel flow wheel, the water moves parallel to the axis of motion, before and after it passes through the wheel; the fixed guide blades, as before, giving the water a tangential whirl.

The principle types of some of the best wheels in use are represented in the foregoing cuts.

The position of the buckets, the direction of the water entering the wheels and the relative values of r and r', the outer and inner radii of the wheels, may be seen more clearly by reference to the diagram given opposite.

To investigate the problems connected with these wheels more minutely:—

Suppose a jet or stream, having a given direction and velocity with reference to the earth, to strike a surface, a vane or "float," all points of which have a motion with a given direction and velocity with reference to the earth; the component of the velocity of the jet in the direction of the motion of the surface may be easily found by the theorem of the parallelogram of velocities.

Let ABC (Fig. 1) be the direction, and $BC=v$, the velocity of a jet of water striking the surface BE, which has a velocity $BD=u$.

Let the angle $DBC=\alpha$ be the angle made by the direction of the jet with the direction of the motion of the surface.

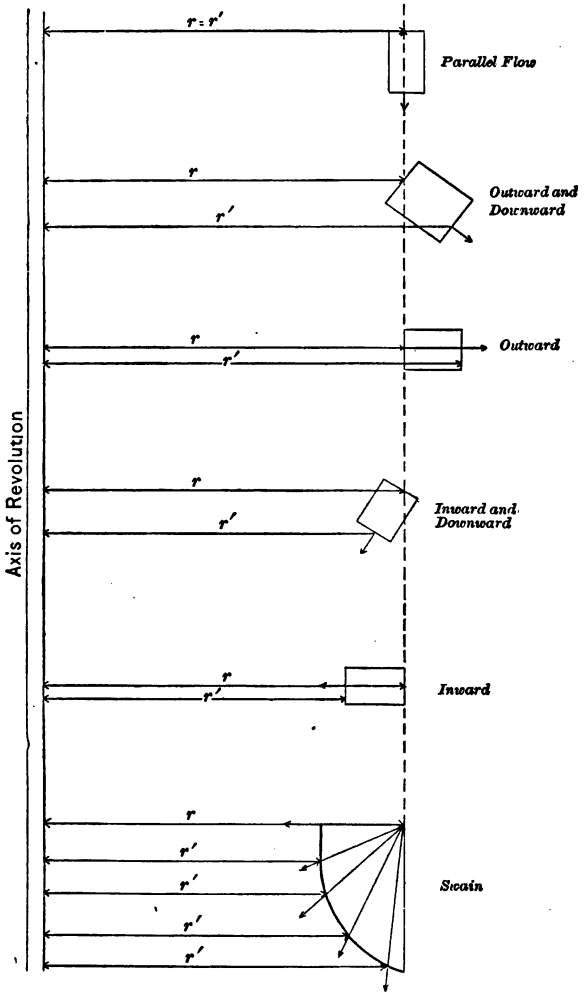
Axis of Revolution
r = r′
Parallel Flow
r
r′
Outward and Downward
r
r′
Outward
r
r′
Inward and Downward
r
r′
Inward
r
r′
r′
r′
r′
Swain

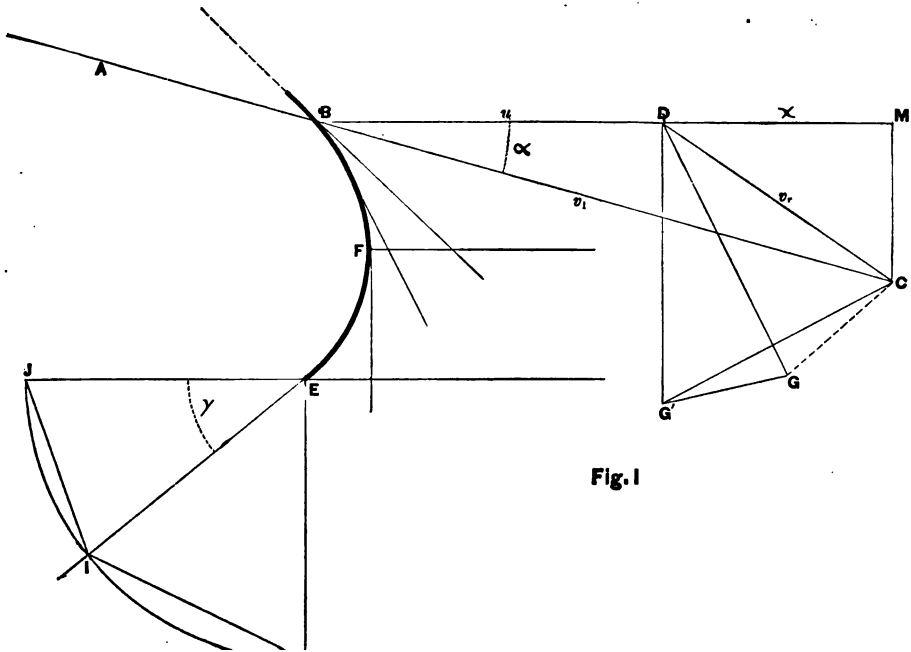

Fig. I

Then v_1 *cos.* a will be the component of the velocity of the stream in the direction BD of the motion of the surface; DM$=x$ will be the difference of velocity in the direction of the motion of the jet and surface and DC the total relative velocity of the jet and surface, in magnitude and direction.

If we draw a tangent to the surface at B and draw the line DG, parallel to this tangent, making DG equal to DC, CG will be the instantaneous deviation due to the impact.

When the jet reaches the point F of the surface, a point at which its direction is perpendicular to the motion of the surface, if we draw the line DG′ parallel to the tangent at F or perpendicular to the motion of the surface, the total deviation of the jet will be CG′ and its projection on BDM, or its component in the direction of the motion BD, will be

$$X=(v_1 \cos. a-u)$$

The relative velocity x_1 of the jet *in the direction of the motion* is not entirely

destroyed until it reaches the point F at which its direction is perpendicular to the direction of the surface BD, and hence we may call the total effect up to this point the impulse of the fluid.

If M be the mass of fluid which passes in a unit of time, the momentum of the fluid with reference to the direction of motion of the surface will be

$$Mx = M(v_1 \cos. a - u) \text{ and}$$

the mechanical work performed by this momentum will be

$$Mxu$$

After the jet passes the point F, the only pressure that it can exert on the surface will be due to a change of direction or deviation, the *reaction* being the pressure exerted.

If the fluid passes off the surface at E, in the direction of the tangent, at E the amount of the additional deviation may be found by drawing EI in the direction of the tangent, and EH in the direction of the jet at F, making EH=EI=DC.

Then HI will be direction, and will

represent the pressure of the jet due to *reaction*, and the projection of this line on the direction of motion, JE, will be the component of this pressure in the direction of the motion.

Representing by γ the angle of departure, made by the tangent IE with the direction of motion, this component will be

$$\overline{\mathrm{IE}} \cos. \gamma$$

or calling IE=DC the *relative* velocity, v_r this component will be

$$v_r \cos. \gamma,$$

and the mechanical work performed per second will be the component pressure $\mathrm{M}\overline{\mathrm{V}_r \cos. \gamma}$ multiplied by U, the velocity of the surface, or

$$\mathrm{M}\overline{v_r \cos. \gamma}\, u.$$

The total work performed by the jet upon the surface due to *impulse* and *reaction*, will be

$$\mathrm{W}=\mathrm{M}(xu+\overline{v_r \cos. \gamma}\, u)$$

the sum of the two effects.

If $\gamma = o$, the work of reaction will be M $v_r\, u$, and the total work

$$W = M(xu + v_r\, u).$$

Since v_r is a function of u, we may find under what circumstances this work will be a maximum.

The problem resolves itself into this: in the known triangles BCD, and BCM required to find the position of the line DC such that $W = u(x + v_r)$ shall be a maximum.

By applying the methods of Calculus it will be found that the expression will be a maximum when $u = v_r$

That is for a maximum,

Let $BM = c \quad CM = b$

then

$$x = \frac{c^2 - b^2}{2c}\ v_r = u = \frac{c^2 + b^2}{2c}$$

and

$$xu + v_r\, u = xu + u^2 = \frac{v_1^2}{2}$$

The same may be demonstrated by geometry. When $\gamma = o$ and $v_r = u$ the fluid in leaving the vane or surface has a mo-

tion in a direction opposite to that of the vane and with a relative velocity equal to that of the vane; hence it will be at rest with reference to the *earth:* and all its energy will have been imparted to the vane.

Since v_1 is the original velocity of the fluid with reference to the earth, its energy is $M\frac{v_1^2}{2}$; but we have under the conditions of the maximum just found

$$(W)_{\text{max.}}=M(xu+u^2)=M\frac{v_1^2}{2}$$

or the maximum work is the whole energy of the fluid, and the efficiency

$$E=\frac{\frac{Mv_1^2}{2}}{\frac{Mv_1^2}{2}}=1$$

If the angle γ is not zero, then the work performed cannot be an absolute maximum, or the efficiency cannot be unity, because the fluid will not leave the vane with a direction and velocity equal and opposite to the direction and velocity

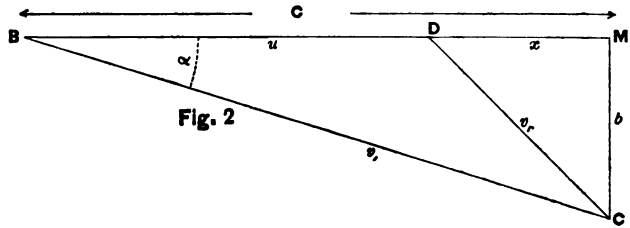

Fig. 2

of the vane. In other words, the fluid will, after leaving the vane have a motion with reference to the earth, the energy due to which will be lost.

The value of this lost work is easily found. In practice the angle γ is always very small.

If a parallelogram (Fig. 3) be drawn, having for sides, the relative velocity $EI = v_r$ and $ET = u$ the diagonal ER for very small angles will be practically $v_r \sin. \gamma$ which will be the velocity of the stream after it leaves the vane at E. The energy due to this velocity will be $\frac{Mv_r^2 \sin.^2\gamma}{2}$ and the general value of the work will be

$$W = M\left(x\,u + u^2 - v^2_r \frac{\sin.^2\gamma}{2}\right)$$

$$W = M\left(\frac{v_1^2}{2} - \frac{v^2_r \sin.^2\gamma}{2}\right)$$

and the efficiency

$$E = \frac{M\left(\frac{v_1^2}{2} - \frac{v_r^2 \sin.^2\gamma}{2}\right)}{\frac{Mv_1^2}{2}}$$

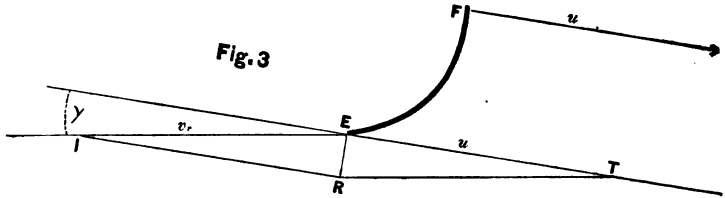

Fig. 3

or

$$E=1-\frac{v_r^2}{v_1^2}\sin.^2\gamma$$

Assuming now that the velocity u was that which gave the absolute maximum when $\gamma=o$ or $u=v_r=\frac{v_1}{2\cos.\ a}$ (see Fig. 2) we have by substituting this value of v_r in the expression for the efficiency

$$E=1-\tfrac{1}{4}\frac{\sin.^2\gamma}{\cos.^2 a}.$$

From this it is apparent that the efficiency is increased by making a and γ small.

If $a=o$ then the stream impinges at right angles to the vane or in the direction of its motion, in which case $x=v_1-u$ and $u=\frac{v_1}{2}$ for the maximum efficiency, and the expressions for the efficiency become for $\gamma=o$

$$E=I$$

and for γ a small angle

$$E=I-\tfrac{1}{4}\sin.^2\gamma$$

Variations from maximum work for variations of u.

If we describe a circle (Fig. 4) on $BM = v_1 \cos. a$ and lay off x and u in such a way that $OC = v_r = u$, we see that the two terms of the expression $xu + v_r u$ will vary as the squares of the ordinates (of the circles) OO' and OR respectively, and the positions of these ordinates are such that the variations of their squares, *i. e.*, $\overline{OO'}^2 = xu$ and $\overline{OR}^2 = v_r u$ will be a minimum, or in other words, small variations of u from the value giving the absolute maximum, may occur without affecting greatly, the value of the work.

Variations from maximum efficiency for variations of the angles a and γ.

In the expression for the efficiency

$$E = 1 - \frac{1}{4} \frac{\sin.^2 \gamma}{\cos.^2 a}$$

found on the supposition that γ is small. If a is also small, the efficiency is not greatly affected by very small changes in these angles.

a being a fixed angle by the conditions of the problem; if γ be variable within small limits, the variations will not affect greatly, the work performed.

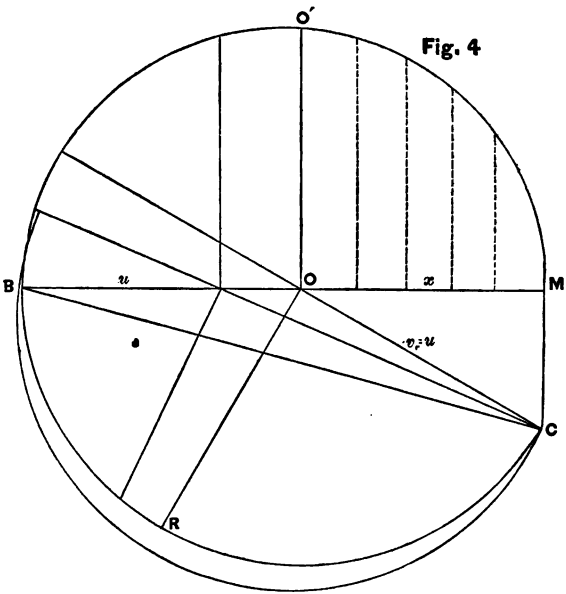
O′
Fig. 4
B
u
O
x
M
v : u
C
R

Method of finding the work performed and the conditions of absolute maximum when the vane or surface revolves around a fixed axis.

Let ABC (Fig. 5) be the direction of the jet with reference to the earth; BD $=u$ the velocity of the point B at which the tangent to the vane coincides with the radius OB of the circle, around whose center the motion takes place: EJ the direction perpendicular to the radius OE, at the point at which the jet leaves the surface or vane, x, u, v_r, a and γ designating the same quantities as before and u' the velocity of the vane at E.

Then, according to the conditions of maximum effect, the jet should leave the van at E, in a direction opposite to u', the direction and velocity of the point of departure E, around the center, and with a velocity relatively to the vane $(-u')$.

If $BC=v_1$ is the original velocity of the jet with reference to the earth, then the absolute maximum work will be

$$M\frac{v_1^2}{2}.$$

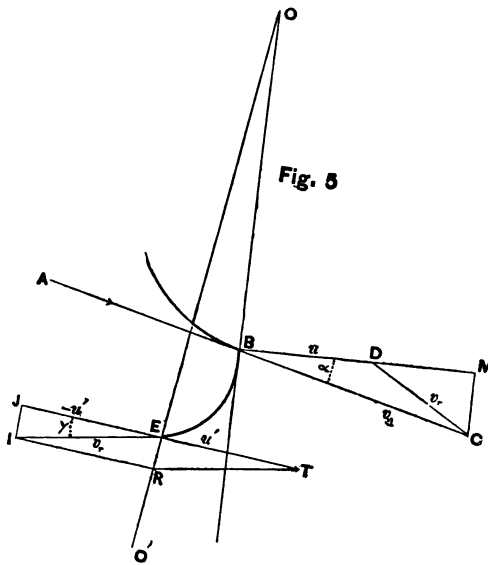

Fig. 5

Since the velocity of the vane at B s $u=ar$, and the velocity at E is $u'=ar'$: a being the angular velocity of the motion; and, since for the absolute maximum work, v_r =DC must be equal to u'; in the triangle BMC, the distance BD$=u$ and DC$=v_r=u'$ must be to each other as r to r'; r being the radius OB and r' the radius OE.

The work of impulse will be, as before, Mxu, since the relative velocity in the direction of the motion (*i. e.*, perpendicular to the radius) is all destroyed at B.

The work of *reaction* of the jet in moving from B to E and passing off at E in a direction opposite to u', will be $Mv_r u''$; u'' being a velocity of motion due to a length of radius between r and r', and the total work, supposing at first, $\gamma=o$ will be

$$W=M(xu+v_r u'').$$

For the absolute maximum or

$$W=M\frac{v_1^2}{2}$$

and E=1 we must have from the me-

chanical conditions $v_r = u'$ and this expression becomes

$$W = M(xu + u'u'') = M\frac{v_1^2}{2}.$$

The value of $u'u''$ which gives the maximum may be found from the following considerations. If the vane had a velocity at all points equal to u, then this term $u'u''$ would be u^2 as in the case first discussed, and if its velocity at all points was u', this term would be u'^2. The true value when the vane revolves around an axis O, will be a mean between u^2 and u'^2, or $\frac{u^2+u'^2}{2}$ and

$$W_{max.} = M\left(xu + \frac{u^2+u'^2}{2}\right) = M\frac{v_1^2}{2}$$

and

$$E = \frac{\frac{Mv_1^2}{2}}{\frac{Mv_1^2}{2}} = 1.$$

Another method of proof is as follows:

In the triangle BMC.

$$(x+u)^2 + v_r^2 - x^2 = v_1^2$$

or $$(x+u)^2 + u'^2 - x^2 = v_1^2$$

developing and cancelling

$$xu+\frac{u^2+u'^2}{2}=\frac{v_1^{\,2}}{2}$$

Since $u=ar$

" $u'=ar'$ $\therefore$ $u=u'\frac{r}{r'}$

and

$$\frac{u^2+u'^2}{2}=\frac{u'^2\frac{r^2}{r'^2}+u'^2}{2}$$

$$=\frac{u'^2}{2}\left(1+\frac{r^2}{r'^2}\right)$$

$$=u'^2\left(\frac{r'^2+r^2}{2r'^2}\right)$$

$$=u'ar'\left(\frac{r'^2+r^2}{2r'^2}\right)$$

$$=u'a\frac{r'^2+r^2}{2r'}$$

Hence $$u''=u.'a.\frac{r'^2+r^2}{2r'}$$

and $\frac{r'^2+r^2}{2r'}$ is the radius or lever arm at which the velocity is u''.

The value of u which gives this maximum will be

$$u=u'\frac{r}{r'}$$

The formula for the absolute maximum work then becomes

$$W_{\text{max.}}=M\left(xu+\frac{u^2+u'^2}{2}\right)=M\frac{v_1^2}{2}$$

and the efficiency

$$E=1$$

This formula may, from what precedes be put under the form

$$W_{\text{max.}}=M\left\{xu+\frac{u'^2}{2}\left(1+\frac{r^2}{r'^2}\right)\right\}=M\frac{v_1^2}{2}$$

In Fig. (5) when the center of motion is O, the stream flows outwardly from the center and r' is greater than r.

If the center of motion were at O′, the stream would flow inwardly, or towards the center, and r would be greater than r'.

If $r=r'$, then $u=u'$ and the formula becomes

$$W_{\text{max.}}=M\left(xu+u^2\right)=M\frac{v_1^2}{2}$$

as before found.

If the angle γ is not zero; but the relative velocities such as would otherwise give the absolute maximum of work, the real work performed and the efficiency may be found as in the first case.

The lost work will be, as before $M\frac{v_r^2 \sin.^2\gamma}{2}$ and the total work

$$W = M\left(xu + \frac{u^2 + u'^2}{2} - \frac{V_r^2 \sin.^2\gamma}{2}\right)$$

$$= M\left(\frac{v_1^2}{2} - \frac{v_r^2 \sin.^2\gamma}{2}\right)$$

and for the efficiency

$$E = \frac{M\left(\frac{v_1^2}{2} - \frac{v_r.^2 \sin^2\gamma}{}\right)}{M\frac{v_1^2}{2}} = 1 - \frac{v_r^2 \sin.^2\gamma}{v_1^2}$$

The relation between v_r and v_1 may be found from the triangle BMC, Fig. 6.

If the angle CDM be designated by δ, then

$$v_1 \sin. a = v_r \sin. \delta$$

and

$$\frac{v_r}{v_1} = \frac{\sin.\ a}{\sin.\ \delta}$$

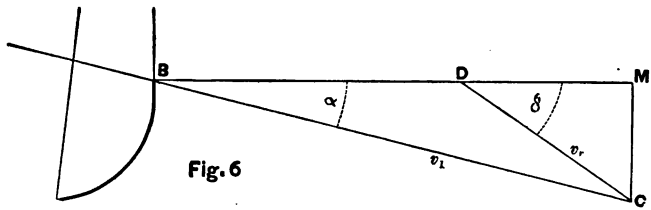

Fig. 6

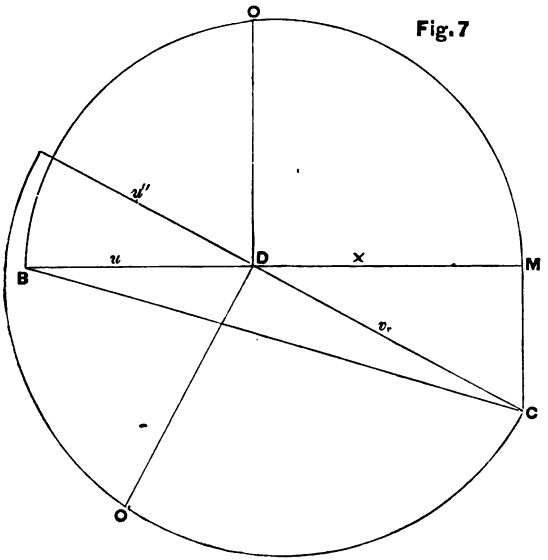
O
Fig. 7
u''
u
D
x
M
B
v
C
O

then $$E=1-\frac{\sin.^2 a}{\sin.^2 \delta}\sin.^2 \gamma$$

From this expression it appears as before that the efficiency is increased by making a and γ small.

Variations of work for small variations of u and v_r.

It is evident from the conditions of this problem that a variation of the angular velocity of motion, will cause simultaneous and proportional changes in the velocities u and u' and in the expression for work

$$W=M(xu+v_r\,u) \quad . \quad . \quad . \quad (\gamma=o)$$

The work will vary as the sum of the squares of the ordinates DO and DO′ (or as $\overline{DO}^2+\overline{DO'}^2$) of the same circles described on the diameters $\overline{x+u}$ or BM and $\overline{v_r+u''}$: u'' being a quantity whose value lies between u and v_r.

The squares of these ordinates will vary very slowly near the values, which make the work an absolute maximum, since the ordinates in this case lie near the centers of the semicircles.

The expression

$$W_{max.} = M\left(xu + \frac{u^2 + u'^2}{2}\right)$$

or

$$W_{max.} = M\left\{xu + \frac{u'^2}{2}\left(1 + \frac{r^2}{r'^2}\right)\right\}$$

is applicable to the three principle types of turbine wheels, by giving to r and r' their proper *relative* values.

For outward flow wheels $r < r'$
For inward flow wheels $r > r'$
For parallel flow wheels $r = r'$

The diagram (Fig. 8) shows that since the ratio of r to r' is the same as that of u to u', that for the same angle a, the velocity of maximum efficiency ($BD' = u$) will be greater for the inward flow than for the outward flow ($BD = u$) and that for each type of wheel with the same angle of incidence, the velocity of maximum efficiency will have a particular value, viz: for parallel flow u will equal v_r the relative velocity, $\left(= \frac{v_1}{2 \cos. a}\right)$ for outward flow wheels, u will be less than

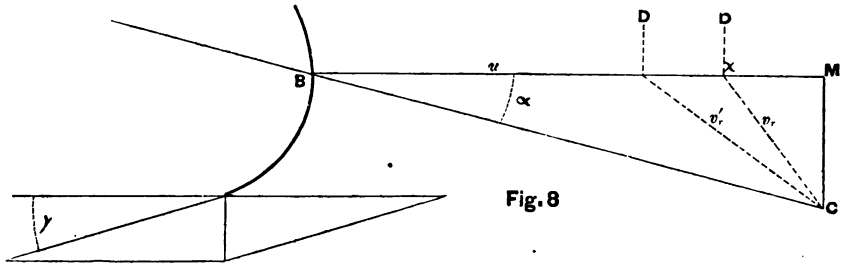

Fig. 8

v_r and for inward flow, u will be greater than v_r

We have now to discuss particular cases of the general expression for work

$$W = M(xu + v_r u'')$$

as applied to different classes or types of water-wheels. Supposing in all cases $\gamma = o$.

IMPACT WHEELS.

This class includes all water-wheels in which the fluid stream acts by impulse, the blades or floats being plane and no reaction taking place from the curvature of the blades after impact.

The axes of such wheels may be vertical, with a single stream or several streams impinging upon plane floats; or the axis may be horizontal as in the case of the old undershot wheel.

To apply the formula to this class, it is only necessary to make the second term zero. The formula will then become $W = Mxu$, and since $x = v_1 \cos. a - u$

$$W = M(v_1 \cos. a - u)u.$$

This expression is a maximum when $a_r \cos. a - u = u$ or

$$u = \frac{v_1 \cos. a}{2}$$

This is the velocity of greatest efficiency, and the efficiency is in all cases

$$E = \frac{W}{\frac{Mv_1^2}{2}} = \frac{Mu^2}{\frac{Mv_1^2}{2}} = \frac{M\frac{v_1^2 \cos.^2 a}{4}}{M\frac{v_1^2}{2}}$$

or

$$E = \frac{\cos.^2 a}{2}.$$

If a is zero, then $u = \frac{v_1}{2}$ is the velocity of greatest efficiency, and $E = \frac{1}{2}$. The usual efficiency of these wheels in practice, is only about $\frac{1}{3}$.

REACTION WHEELS.

A reaction wheel is one in which there is no effect from impulse; or in the general expression

$$W = M(xu + v_r u'')$$

it is necessary to make $x = o$. The expression then becomes

$$W = Mv_r u''$$

In these wheels, the deviation of the stream caused by the curvature of the blades is the cause of the energy exerted and several distinct cases may arise.

First, suppose the stream to flow in a direction parallel to the axis of revolution as in the Jonval Wheel; that is, suppose it to be a parallel flow reaction wheel. Then since $x=o$ (Fig. 9) $u=v_1 \cos. a$ and the expression becomes

$$W=Mv_r v_1 \cos. a$$

But the same construction shows that $v_r=MC=v_1 \sin. a$ and the value of W becomes

$$W=Mv_1^2 \sin. a \cos. a$$

For this expression there is no absolute maximum except in one particular case, *i.e.*, for $a=45°$ in which case $v_1 \sin. a = v_1 \cos. a$ and $v_1^2 \sin. a \cos. a = v_1^2 \sin.^2 a = \frac{v_1^2}{2}$ and $W=M\frac{v_1^2}{2}$

$$E=1$$

It follows from this that if in the parallel flow wheel, the principle is insisted on that the water must enter with-

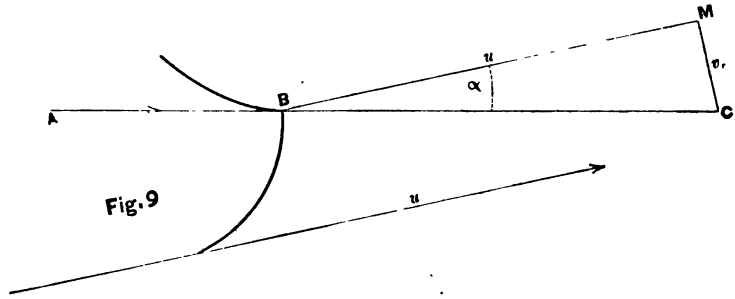

Fig. 9

out shock, or in the language of Bresse, if "it is necessary that at the point B, (Fig. 8) the water shall be directed tangentially to the floats" the latter being radial at the point of entrance of the water, the wheel becomes simply a reaction wheel and there is no theoretical absolute maximum except for the particular angle $\ddot{a}=45°$.

Bresse, in discussing the problem for the Fourneyron and parallel flow turbines, deduces nine equations involving sixteen unknown quantities, which involve the necessary conditions of a perfect wheel. A discussion applicable only upon the particular conditions which he presents, but not applicable to American Turbine wheels as now constructed and employed. Nevertheless his discussions which have been translated for use in this country are entitled *Turbine Wheels*, and there is no indication given that they are not applicable to all Turbines.

Second.—If under the supposition that there is no impulsive action of the water, we suppose the stream to flow outwardly from the axis. The work performed will be as before for $x=o$

$$W = Mv_r\, u''$$

or putting for $v_r\, u''$ in the general case $\frac{u'^2}{2}\left(1+\frac{r^2}{r'^2}\right)$ we have

$$W = M\,\frac{u'^2}{2}\left(1+\frac{r^2}{r'^2}\right).$$

This applies to the case where the water enters tangentially to the floats, which are radial in direction as at B Fig. 7 or 8, and for which the value of $u = v_1 \cos. a$.

The condition is thus fulfilled as expressed by Rankine, that "the whirling velocity of the water, when it enters the wheel, must be equal to the tangential velocity of the wheel," a condition applicable, according to this author, to all turbines.

But in this case it is evident from the expression

$$W = M\left\{\frac{u'^2}{2}\left(1+\frac{r^2}{r'^2}\right)\right\}$$

that there is no theoretical maximum and the wheel becomes simply a reaction wheel. For an absolute maximum or an efficiency equal to unity, we must have

$$W_{\text{max.}} = M\frac{u'^2}{2}\left(1+\frac{r^2}{r'^2}\right) = M\frac{v_1^{\,2}}{2}$$

which can only be the case when $r = r'$ and $u'^2 = \frac{v_1^{\,2}}{2}$ which takes us back to the particular case of the parallel flow wheel, with an angle $\alpha = 45°$.

In the outward and inward flow reaction wheels, *i.e.*, those wheels in which the buckets are radial at the point of entrance of the water, and in which the velocity of the wheel at this point is the same as the component velocity of the water in the same direction, there is no work of impulse, and the wheels become reaction wheels, for which the efficiency cannot be unity, but there will always be a loss of energy due to the ratio $\frac{r}{r'}$.

Application of the general formula for work

$$W = M(xu + v_r\, u'')$$

to the wheel known as Barker's Mill.

In this wheel the water descends in a column H, Fig. 10, which is at the same time the axis of motion, and flows out-

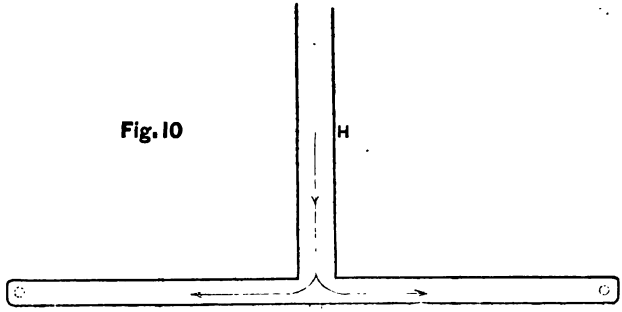

Fig. 10

wardly to the ends of two tubular arms where it issues from two orifices on opposite sides of the arms.

As the water enters the arms without impulse, the term Mxu in this formula will be zero and the expression for work will be

$$W = Mv_r\, u''$$

u'' will be the circular velocity of the end of the arm at the point where the water issues, v_r, being the relative velocity of the arm and fluid at the same point, may be found thus. In the plan of the wheel, Fig. 11, let v_1 be the velocity due to the head. A particle at the end of the arm is subjected to two velocities, one v_1 due to the head and another u'' due to the rotation of the arm. Its actual velocity with reference to the earth, will be represented by the diagonal of the rectangular parallelogram constructed on these two lines, and will be expressed analytically by

$$\sqrt{v_1^2 + u''^2}$$

This will be the velocity with reference to the earth, with which the jet will issue

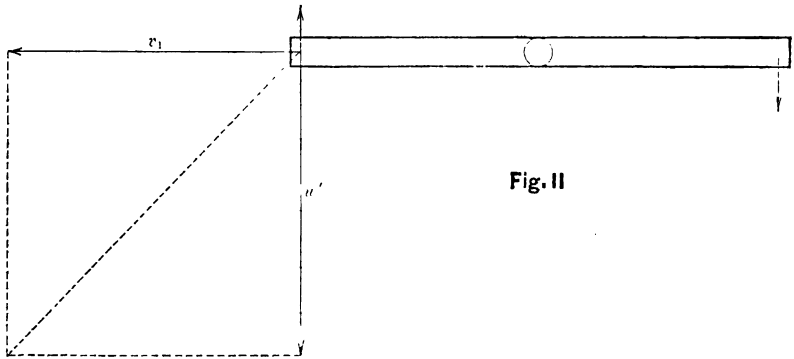

Fig. II

from the arm in a direction opposite to its motion; but the arm has a velocity $u''=ar$ (a being the angular velocity and r the radius of the arm) and the relative velocity with reference to the arm will be

$$v_r = \sqrt{v_1^2 + u''^2} - u''$$

and the work performed will be found by multiplying this by u'' and by M, the mass of water which issues in a unit of time or

$$W = Mv_r\, u'' = Mu''(\sqrt{v_1^2 + u''^2} - u'')$$

an expression which has no maximum.

In the foregoing discussion, no account has been taken of the resistances which arise from friction, or loss of energy from contractions, bends and other causes which influence the flow through narrow passages, like the spaces between the guide blades and the wheel buckets or floats. These influences will, of course, affect the efficiency of all wheels, and also the velocity of maximum efficiency and, of course, in no actual case can an efficiency of unity be attained. The general theory is not, however, altered on this

account; and inasmuch as it is impossible to separate the influences referred to from each other, or to ascertain the values of co-efficients which might be applied, the only means of ascertaining how near the performance of any wheel approaches the maximum efficiency is by a practical test.

From Francis' experiments it appears that the velocity of maximum efficiency is somewhat greater than that which would be given by theory when friction is not considered.

It has been shown that a considerable change in velocity of a wheel when it runs at a speed giving its maximum efficiency, influences but little, the work performed.

A change in velocity in the Tremont turbine from .48 to .68 of the velocity due to the fall, affected the efficiency by only two per cent., and Francis recommends a velocity of .56 of the velocity due to the fall, as the best in practice, which is in excess of the theoretical ve-

locity of greatest efficiency, when friction is not considered.

The following diagram of the Tremont turbine and Francis' center-vent, or inward flow turbine, exhibit the particulars of these wheels: 1st, in the small ratio $\frac{r}{r'}$ of the outer and inner radii and the small angles of incidence and departure of the water; and when the velocity of the wheels which give the maximum efficiency is considered, it appears that the velocities of the wheels, at the point where they receive the entering water, is much less than the tangential component of the entering water, thus causing a large part of the work to be done by impulse.

An unnecessary importance seems to have been attached to the idea that a stream of water, to produce its best effect upon a vane, or float, must glide upon the latter in a tangential direction. The following simple experiment may be made by any one who wishes to be convinced of this.

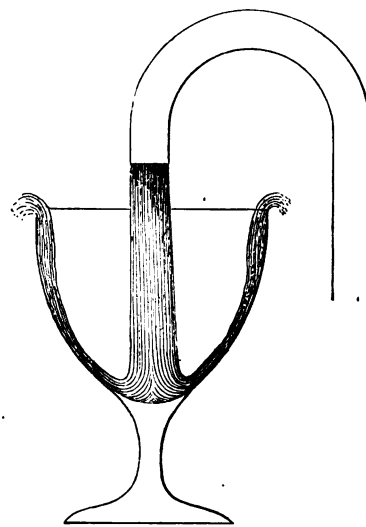

Place a goblet under an ordinary goose neck spout, from which a clear and transparent stream issues, impinging on the bottom of the goblet. If the velocity of the stream is sufficient, the water will rise up and flow over the edge of the goblet at all points in a clear, unbroken sheet, the liquid threads being continuous and unbroken, and the whole remaining as transparent as the glass itself. A more satisfactory experiment may, perhaps, be made by inverting the goblet and allowing the stream to enter from below; more satisfactory, because considerable head is required in the first case. This experiment shows that the disturbances in the stream, from impact, which have been considered of so much importance, do not exist in this, the most unfavorable case, where the impact is normal.

The Poncelet wheel, a vertical water wheel, the construction of which is familiar to all engineers and students, is one in which a principal virtue is supposed to exist in a curved form of the buckets—

such that the water enters the wheel "without shock."

Weisbach states that "to obtain as great an effect as possible with one of Poncelet's wheels, it is necessary that the water should enter the wheel without shock." And it has been considered that one object of the peculiar construction and arrangement of Poncelet was to attain this particular end; whereas a little consideration shows that the curvature of the blade and the peculiarities of construction were designed for quite another purpose.

In fact, the analysis would be quite as complete for this wheel as far as impulse is concerned, if the water impinged directly upon a plane float.

It is only to obtain the effect of reaction by the returning water that the curvature is necessary.

In order to find the actual value of the efficiency as deduced from the formula

$$E=1-\frac{\sin.^2 \alpha}{\sin.^2 \delta}\sin.^2 \gamma$$

we have only to substitute values for α,

δ and γ. Taking, for example, $\alpha=22°$, $\gamma=11°$ and $\delta=46°$ the values employed in the Tremont Turbine, substituting and solving we have

$$E=.9902$$

For Francis' Center Vent Wheel $\alpha=9°30'$ $\gamma=10°$ and $\delta=28°$ which give for the efficiency

$$E=.9962$$

These results show a theoretical efficiency practically equal to unity, when friction and other disturbing resistances are not considered. The angles of incidence and departure being so small as to have but a slight influence in lessening the efficiency when the proper theoretical velocity is given to the wheels.

The angles of incidence of the Swain wheel are about 12° only, and the angle of departure of the inward flow wheels now made is not much greater. It is not surprising, therefore, that a common working efficiency of 84 per cent. should be attained.

The efficiency of an impulse and reaction turbine, properly consructed and

run with the proper velocity, being thus practically unity, or 99 per cent., when loss of energy from friction, and other causes of loss of energy of a similar character, are not considered, the greatest possible efficiency in practice may be found roughly as follows:

Estimating the co-efficient of velocity of discharge from the guide blades at ,97 the loss of energy due to this loss of velocity will be, $[(\frac{1}{97})^2 - 1]\frac{Mv_1^2}{2}$ equal $06\frac{Mv_1^2}{2}$; and supposing the friction in the wheel to consume the same amount of energy, the total loss will be $,12\frac{Mv_1^2}{2}$.

If we suppose the friction of the pivots on which the wheel runs, and the collars of the axis to be in the most favorable case $,03\frac{Mv_1^2}{2}$ we have a total of $,15\frac{Mv_1^2}{2}$ which with the loss of .01 due to the obliquity of the angles α and γ will give a total of 16 per cent. of the energy due to the fall, leaving a practical efficiency of

84 per cent. which is the efficiency foun by Francis for an ordinary Swain wheel.

RULES FOR DESIGNING WHEELS.

Let D be the diameter of the wheel.

Let a be the angle of incidence of the water with the tangent to the circumference.

Let H be the depth between the crowns at the first circumference or point of entrance.

C a co-efficient of discharge.

A the area of section of entrance of water in the direction of the radius, then the volume of flow will be

$$V = \pi D . H . v_1 \sin. a . C.$$

Assuming a diameter D. a co-efficient of discharge C and an angle of incidence a the depth H will be

$$H = \frac{V}{C. \pi D. v_1 \sin. a}$$

By experiments on the Tremont tur bine in which D=8.25308 feet=sum of the widths of the orifices of discharge

across the guide blades, and for the heights of the orifices of discharge H, or depth of wheel $=.9314$ feet. Francis found $C=.624$.

Hence his general rule, making $H'=\frac{1}{10}$ of the *outer diameter* D',

$$V=H'.\ D'.\ C\,v_1=0.10\ D'^2 e\sqrt{2gh_1}$$
$$=0.5\ \ D'^2\sqrt{h_1}$$

In which H_1 is the *depth of the wheel at the outer extremities of the buckets* and $H'=\frac{1}{10}D'$.

The simplicity of Francis' formula for the flow

$$V=0.5D'^2\sqrt{h_1}$$

is one of the results of his valuable experiments, giving by a very simple calculation the necessary diameter of an outward flow turbine for a given head h_1 and a given volume of flow V. For a given horse power, $\overline{HP}$ in foot pounds per second, with an efficiency of 75,

$$\overline{HP}=\frac{0.75\times 62.33}{550}\times Vh_1$$

and since $V=0.5\,D'^2\sqrt{h_1}$

$$D' = 4.85\sqrt{\frac{P}{h_1\sqrt{h_1}}}$$

Formulas which are applicable to outward flow wheels, within the limits assigned by Francis.

To make the formula more general, we have

$$V = .62\ D.H.\pi.v_1 \sin.\ a$$
$$= f.D^2\ v_1 \sin.\ a\ \pi.\ ,62$$

f being ratio of D to H.

Supposing V to be the actual volume of flow per second, and the wheel to utilize .75% of the fall h, multiplied by the weight, then we have the horse-power per second,

$$\overline{HP} = \frac{0.75\ .(62\ .43)}{550} Vh_1 \ldots . (a)$$

and substituting for V its value

$$V = f.D^2.v_1 \sin.\ a\ .62\ \pi$$
$$= f.D^2.v_1 \sin.\ a\ 1.95$$

we have

$$\overline{HP} = \left(\frac{0.75 \times 62.43}{550} \times 1.95\right) f.D^2.v_1 \sin.\ a h_1$$

or

$$\overline{\text{H}}\text{P} = \left(\frac{0.75 \times 62.43 \times 1.956}{550}\right) \cdot f.\text{D}^2 . \sqrt{2gh_1} \sin. \alpha\, h_1$$

$$\overline{\text{H}}\text{P} = \left(\frac{0.75 \times 62.43 \times 1.956 \times 8.03}{550}\right) f.\text{D}.^2 \sin. \alpha\, h_1 \sqrt{h_1}$$

$$\overline{\text{H}}\text{P} = 1.33\, f.\text{D}^2 . \sin. \alpha\, h_1 \sqrt{h_1}$$

$$\text{D} = \sqrt{\frac{\text{HP}}{1.33\, f. \sin. \alpha\, h_1 \sqrt{h_1}}} \quad \ldots\ldots \quad (b)$$

f being the ratio of diameter to depth, H.

Having found the diameter D (the diameter of that circumference on which the water first impinges) whether for outward or inward flow, the second diameter may be found from the relation of the radii shown in the diagrams which have been given.

The depth $\text{H} = f.\text{D}.$ of the wheel should be somewhat greater at the discharging diameter D′, in order to make allowance for the greater space occupied on the circumference by the oblique positions of the extremities of the buckets.

The angular velocity of the wheel be-

ing $\overline{2\pi N}$ in which N is the number of revolutions per second. The tangential velocity will be

$$u = 2\pi N v$$

For parallel flow wheels

$$V = C.A.v_1 \sin. a$$
$$= C.\pi(r'^2 - r^2) \sin. a$$

C being a co-efficient of discharge and A the area of the annular space through which the water flows, equal to $\pi(r'^2 - r^2)$.

If D be the mean diameter and f the ratio of D to $(r' - r)$ or $f = \frac{r' - r}{D}$ then the formula (b) will apply to parallel flow wheels.

FORM OF BLADES.

For the three typical wheels, the *outward flow*, the *inward flow*, and the *parallel flow*, the path of a particle of water continues in one plane. In the outward and inward flow wheels, the planes of motion of the particles are perpendicular to the axis. In the parallel flow, the planes of the paths are parallel to the axis.

The lips of the buckets at the points of entrance to the whecl are generally straight edges, and for these three wheels are either perpendicular or parallel to the axis of motion.

The discharging edges are lines parallel to the receiving edges and the buckets at the discharging edges have a constant angle γ, along the edge, with the circumference.

In the outward and inward flow wheels the edges are elements of the cylindrical surfaces of the outer and inner circumferences of the wheel, and in the parallel flow, the receiving and discharging edge of the buckets are radial.

Combinations of these simple wheels, however, present different conditions; the *inward* and *downward* flow wheels represented by the Swain and Risdon, for example, and the *outward* and *downward* flow represented by the Excelsior wheel.

The general principles to be kept in view for all buckets, are that the channels between the buckets shall not have

abrupt changes in direction; that they shall be as short as possible; that the curvature of the buckets shall be continuous; that the discharging edges of the buckets shall have a uniform discharging angle, and that the cross-section of the channels between the buckets shall be uniform throughout. It is especially important that the water should leave the guide blades and enter the wheel in clear, transparent streams, without contraction, in order that that these streams may continue unbroken through the wheel to the point of discharge.

*** Any book in this Catalogue sent free by mail, on receipt of price.*

VALUABLE

SCIENTIFIC BOOKS,

PUBLISHED BY

D. VAN NOSTRAND,

23 Murray Street, and 27 Warren Street,

NEW YORK.

WEISBACH. A MANUAL OF THEORETICAL MECHANICS. By Julius Weisbach, Ph. D. Translated by Eckley B. Coxe, A.M., M.E. 1100 pages and 902 wood-cut illustrations. 8vo, cloth, ... $10 00

FRANCIS. LOWELL HYDRAULIC EXPERIMENTS—being a Selection from Experiments on Hydraulic Motors, on the Flow of Water over Weirs, and in open Canals of Uniform Rectangular Section, made at Lowell, Mass. By J. B. Francis, Civil Engineer. Third edition, revised and enlarged, with 23 copper-plates, beautifully engraved, and about 100 new pages of text. 4to, cloth, ... 15 00

KIRKWOOD. ON THE FILTRATION OF RIVER WATERS, for the Supply of Cities, as practised in Europe. By James P. Kirkwood. Illustrated by 30 double-plate engravings. 4to, cloth 15 00

FANNING. A PRACTICAL TREATISE OF WATER SUPPLY ENGINEERING. Relating to the Hydrology, Hydrodynamics, and Practical Construction of Water-Works, in North America. With numerous Tables and 180 illustrations. By J. T. Fanning, C.E. 650 pages. 8vo, cloth extra, . $6 00

WHIPPLE. AN ELEMENTARY TREATISE ON BRIDGE BUILDING. By S. Whipple, C. E. New Edition. Illustrated. 8vo, cloth, 4 00

MERRILL. IRON TRUSS BRIDGES FOR RAILROADS. The Method of Calculating Strains in Trusses, with a careful comparison of the most prominent Trusses, in reference to economy in combination, etc., etc. By Bvt. Col. William E. Merrill, U. S. A., Corps of Engineers. Nine lithographed plates of illustrations. Third edition. 4to, cloth, ... 5 00

SHREVE. A TREATISE ON THE STRENGTH OF BRIDGES AND ROOFS. Comprising the determination of Algebraic formulas for Strains in Horizontal, Inclined or Rafter, Triangular, Bowstring Lenticular and other Trusses, from fixed and moving loads, with practical applications and examples, for the use of Students and Engineers By Samuel H. Shreve, A. M., Civil Engineer. Second edition, 87 wood-cut illustrations. 8vo, cloth, . . . 5 00

KANSAS CITY BRIDGE. WITH AN ACCOUNT OF THE REGIMEN OF THE MISSOURI RIVER,—and a description of the Methods used for Founding in that River. By O. Chanute, Chief Engineer, and George Morison, Assistant Engineer. Illustrated with five lithographic views and twelve plates of plans. 4to, cloth, . . . 6 00

CLARKE. DESCRIPTION OF THE IRON RAILWAY BRIDGE Across the Mississippi River at Quincy, Illinois. By Thomas Curtis Clarke, Chief Engineer. With twenty-one lithographed Plans. 4to, cloth, ... $7 50

ROEBLING. LONG AND SHORT SPAN RAILWAY BRIDGES. By John A. Roebling, C. E. With large copperplate engravings of plans and views. Imperial folio, cloth, . 25 00

DUBOIS. THE NEW METHOD OF GRAPHICAL STATICS. By A. J. Dubois, C. E., Ph. D. 60 illustrations. 8vo, cloth, ... 2 00

EDDY. NEW CONSTRUCTIONS IN GRAPHICAL STATICS. By Prof. Henry B. Eddy, C. E. Ph. D. Illustrated by ten engravings in text, and nine folding plates. 8vo, cloth, 1 50

BOW. A TREATISE ON BRACING—with its application to Bridges and other Structures of Wood or Iron. By Robert Henry Bow, C. E. 156 illustrations on stone. 8vo, cloth, 1 50

STONEY. THE THEORY OF STRAINS IN GIRDERS—and Similar Structures—with Observations on the Application of Theory to Practice, and Tables of Strength and other Properties of Materials. By Bindon B. Stoney, B. A. New and Revised Edition, with numerous illustrations. Royal 8vo, 664 pp., cloth, ... 12 50

HENRICI. SKELETON STRUCTURES, especially in their Application to the building of Steel and Iron Bridges. By Olaus Henrici. 8vo, cloth, ... 1 50

KING. LESSONS AND PRACTICAL NOTES ON STEAM. The Steam Engine, Propellers, &c., &c., for Young Engineers. By the late W. R. King, U. S. N., revised by Chief-Engineer J. W. King, U. S. Navy. 19th edition. 8vo, cloth, ... 2 00

AUCHINCLOSS. APPLICATION OF THE SLIDE VALVE and Link Motion to Stationary, Portable, Locomotive and Marine Engines. By William S Auchincloss. Designed as a hand-book for Mechanical Engineers. With 37 wood-cuts and 21 lithographic plates, with copper-plate engraving of the Travel Scale. Sixth edition. 8vo, cloth, $3 00

BURGH. MODERN MARINE ENGINEERING, applied to Paddle and Screw Propulsion. Consisting of 36 Colored Plates, 259 Practical Wood-cut Illustrations, and 403 pages of Descriptive Matter, the whole being an exposition of the present practice of the following firms: Messrs J. Penn & Sons; Messrs. Maudslay, Sons & Field; Messrs. James Watt & Co.; Messrs. J. & G. Rennie. Messrs. R. Napier & Sons: Messrs J. & W. Dudgeon; Messrs. Ravenhill & Hodgson· Messrs Humphreys & Tenant; Mr J. T. Spencer, and Messrs. Forrester & Co. By N P. Burgh. Engineer. One thick 4to vol., cloth. $25 00; half morocco, 30 00

BACON. A TREATISE ON THE RICHARD'S STEAM-ENGINE INDICATOR—with directions for its use. By Charles T. Porter. Revised, with notes and large additions as developed by American Practice; with an Appendix containing useful formulæ and rules for Engineers. By F. W. Bacon, M E. Illustrated Second edition. 12mo. Cloth $1.00; morocco, ... 1 50

ISHERWOOD. ENGINEERING PRECEDENTS FOR STEAM MACHINERY. By B. F. Isherwood, Chief Engineer, U. S. Navy. With illustrations. Two vols. in one. 8vo, cloth, 2 50

STILLMAN. THE STEAM ENGINE INDICATOR—and the Improved Manometer Steam and Vacuum Gauges—their utility and application. By Paul Stillman. New edition. 12mo, cloth, ... 1 00

MacCORD. A PRACTICAL TREATISE ON THE SLIDE VALVE, BY ECCENTRICS—examining by methods the action of the Eccentric upon the Slide Valve, and explaining the practical processes of laying out the movements, adapting the valve for its various duties in the steam-engine. By C. W. Mac Cord, A. M., Professor of Mechanical Drawing, Stevens' Institute of Technology, Hoboken, N. J. Illustrated. 4to, cloth, ... $3 00

PORTER. A TREATISE ON THE RICHARDS' STEAM-ENGINE INDICATOR, and the Development and Application of Force in the Steam-Engine. By Charles T. Porter. Third edition, revised and enlarged. Illustrated. 8vo, cloth, ... 3 50

McCULLOCH A TREATISE ON THE MECHANICAL THEORY OF HEAT, AND ITS APPLICATIONS TO THE STEAM-ENGINE. By Prof. R. S. McCulloch, of the Washington and Lee University, Lexington, Va. 8vo, cloth, ... 3 50

VAN BUREN. INVESTIGATIONS OF FORMULAS—for the Strength of the Iron parts of Steam Machinery. By J. D. Van Buren, Jr., C. E. Illustrated. 8vo, cloth, . 2 00

STUART. HOW TO BECOME A SUCCESSFUL ENGINEER. Being Hints to Youths intending to adopt the Profession. By Bernard Stuart, Engineer Sixth edition 18mo, boards, ... 50

SHIELDS. A TREATISE ON ENGINEERING CONSTRUCTION. Embracing Discussions of the Principles involved, and Descriptions of the Material employed in Tunneling, Bridging, Canal and Road Building, etc., etc. By J. E. Shields, C. E. 12mo. cloth, 1 50

WEYRAUCH. STRENGTH AND CALCULATION OF DIMENSIONS OF IRON AND STEEL CONSTRUCTIONS. Translated from the German of J. J. Weyrauch, Ph. D., with four folding Plates. 12mo, cloth, ... $1 00

STUART. THE NAVAL DRY DOCKS OF THE UNITED STATES. By Charles B. Stuart, Engineer in Chief, U. S. Navy. Twenty-four engravings on steel. Fourth edition. 4to, cloth, ... 6 00

COLLINS. THE PRIVATE BOOK OF USEFUL ALLOYS, and Memoranda for Goldsmiths, Jewellers, etc. By James E. Collins. 18mo, flexible cloth, ... 50

TUNNER. A TREATISE ON ROLL-TURNING FOR THE MANUFACTURE OF IRON. By Peter Tunner Translated by John B. Pearse. With numerous wood-cuts, 8vo, and a folio Atlas of 10 lithographed plates of Rolls, Measurements, &c. Cloth, . . 10 00

GRÜNER. THE MANUFACTURE OF STEEL. By M. L. Gruner. Translated from the French, by Lenox Smith, A.M., E.M.; with an Appendix on the Bessemer Process in the United States, by the translator. Illustrated by lithographed drawings and wood-cuts. 8vo, cloth, ... 3 50

BARBA. THE USE OF STEEL IN CONSTRUCTION. Methods of Working, Applying, and Testing Plates and Bars. By J. Barba. Translated from the French, with a Preface by A. L. Holley, P.B. Illustrated. 12mo, cloth, 1 50

BELL. CHEMICAL PHENOMENA OF IRON SMELTING. An Experimental and Practical Examination of the Circumstances which Determine the Capacity of the Blast Furnace, the Temperature of the Air, and the Proper Condition of the Materials to be operated upon. By I. Lowthian Bell. 8vo, cloth, ... 6 00

WARD. STEAM FOR THE MILLION. A Popular Treatise on Steam and its Application to the Useful Arts, especially to Navigation. By J. H. Ward, Commander U. S. Navy. 8vo, cloth, ... $1 00

CLARK. A MANUAL OF RULES, TABLES AND DATA FOR MECHANICAL ENGINEERS. Based on the most recent investigations. By Dan. Kinnear Clark. Illustrated with numerous diagrams. 1012 pages. 8vo. Cloth, $7 50; half morocco, ... 10 00

JOYNSON. THE METALS USED IN CONSTRUCTION: Iron, Steel, Bessemer Metals, etc, By F. H. Joynson. Illustrated. 12mo, cloth, ... 75

DODD. DICTIONARY OF MANUFACTURES, MINING, MACHINERY, AND THE INDUSTRIAL ARTS. By George Dodd. 12mo, cloth, 1 50

VON COTTA. TREATISE ON ORE DEPOSITS. By Bernhard Von Cotta, Freiburg, Saxony. Translated from the second German ed., by Frederick Prime, Jr., and revised by the author. With numerous illustrations. 8vo, cloth, ... 4 00

PLATTNER. MANUAL OF QUALITATIVE AND QUANTITATIVE ANALYSIS WITH THE BLOW-PIPE. From the last German edition. Revised and enlarged. By Prof. Th. Richter, o the Royal Saxon Mining Academy. Translated by Professor H. B. Cornwall. With eighty-seven wood-cuts and lithographic plate. Third edition, revised. 568 pp. 8vo, cloth, ... 5 00

PLYMPTON. THE BLOW-PIPE: A Guide to its Use in the Determination of Salts and Minerals. Compiled from various sources, by George W. Plympton, C. E., A. M., Professor of Physical Science in the Polytechnic Institute, Brooklyn, N. Y. 12mo, cloth, 1 50

JANNETTAZ. A GUIDE TO THE DETERMINATION OF ROCKS; being an Introduction to Lithology. By Edward Jannettaz, Docteur des Sciences. Translated from the French by G. W. Plympton, Professor of Physical Science at Brooklyn Polytechnic Institute. 12mo, cloth, ... $1 50

MOTT. A PRACTICAL TREATISE ON CHEMISTRY (Qualitative and Quantitative Analysis), Stoichiometry, Blowpipe Analysis, Mineralogy, Assaying, Pharmaceutical Preparations Human Secretions, Specific Gravities, Weights and Measures, etc., etc., etc. By Henry A. Mott, Jr., E. M., Ph. D. 650 pp. 8vo, cloth, ... 6 00

PYNCHON. INTRODUCTION TO CHEMICAL PHYSICS; Designed for the Use of Academies, Colleges, and High Schools. Illustrated with numerous engravings, and containing copious experiments, with directions for preparing them. By Thomas Ruggles Pynchon, D. D., M. A., President of Trinity College, Hartford. New edition, revised and enlarged. Crown 8vo, cloth, ... 3 00

PRESCOTT. CHEMICAL EXAMINATION OF ALCOHOLIC LIQUORS. A Manual of the Constituents of the Distilled Spirits and Fermented Liquors of Commerce, and their Qualitative and Quantitative Determinations. By Alb. B. Prescott, Prof. of Chemistry, University of Michigan. 12mo, cloth, . 1 50

ELIOT AND STORER. A COMPENDIOUS MANUAL OF QUALITATIVE CHEMICAL ANALYSIS. By Charles W. Eliot and Frank H. Storer. Revised, with the co-operation of the Authors, by William Ripley Nichols, Professor of Chemistry in the Massachusetts Institute of Technology. New edition, revised. Illustrated. 12mo, cloth, ... 1 50

NAQUET. LEGAL CHEMISTRY. A Guide to the Detection of Poisons, Falsification of Writings, Adulteration of Alimentary and Pharmaceutical Substances; Analysis of Ashes, and Examination of Hair, Coins, Fire-arms and Stains, as Applied to Chemical Jurisprudence. For the Use of Chemists, Physicians, Lawyers, Pharmacists, and Experts. Translated, with additions, including a List of Books and Memoirs on Toxicology, etc., from the French of A. Naquet, by J. P. Battershall, Ph. D.; with a Preface by C. F. Chandler, Ph. D., M. D., LL. D. Illustrated. 12mo, cloth, ... $2 00

PRESCOTT. OUTLINES OF PROXIMATE ORGANIC ANALYSIS for the Identification, Separation, and Quantitative Determination of the more commonly occurring Organic Compounds. By Albert B. Prescott, Professor of Chemistry, University of Michigan. 12mo, cloth, ... 1 75

DOUGLAS AND PRESCOTT. QUALITATIVE CHEMICAL ANALYSIS. A Guide in the Practical Study of Chemistry, and in the work of Analysis. By S. H. Douglas and A. B. Prescott; Professors in the University of Michigan. Second edition, revised. 8vo, cloth, ... 3 50

RAMMELSBERG. GUIDE TO A COURSE OF QUANTITATIVE CHEMICAL ANALYSIS, ESPECIALLY OF MINERALS AND FURNACE PRODUCTS. Illustrated by Examples. By C. F. Rammelsberg. Translated by J. Towler, M. D. 8vo, cloth, ... 2 25

BEILSTEIN. AN INTRODUCTION TO QUALITATIVE CHEMICAL ANALYSIS. By F. Beilstein. Third edition. Translated by I. J. Osbun. 12mo. cloth, ... 75

POPE. A Hand-book for Electricians and Operators. By Frank L. Pope. Ninth edition. Revised and enlarged, and fully illustrated. 8vo, cloth, ... 2 00

SABINE. HISTORY AND PROGRESS OF THE ELECTRIC TELEGRAPH, with Descriptions of some of the Apparatus. By Robert Sabine, C. E. Second edition. 12mo, cloth, . . $1 25

DAVIS AND RAE. HAND BOOK OF ELECTRICAL DIAGRAMS AND CONNECTIONS. By Charles H. Davis and Frank B. Rae. Illustrated with 32 full-page illustrations. Second edition. Oblong 8vo, cloth extra, ... 2 00

HASKINS. THE GALVANOMETER, AND ITS USES. A Manual for Electricians and Students. By C. H. Haskins. Illustrated. Pocket form, morocco, ... 1 50

LARRABEE. CIPHER AND SECRET LETTER AND TELEGRAPAIC CODE, with Hogg's Improvements. By C. S. Larrabee. 18mo, flexible cloth, ... 1 00

GILLMORE PRACTICAL TREATISE ON LIMES, HYDRAULIC CEMENT, AND MORTARS. By Q. A. Gillmore, Lt.-Col. U. S. Engineers, Brevet Major-General U. S. Army. Fifth edition, revised and enlarged. 8vo, cloth, 4 00

GILLMORE. COIGNET BETON AND OTHER ARTIFICIAL STONE. By Q. A. Gillmore, Lt. Col. U. S. Engineers, Brevet Major-General U. S. Army. Nine plates, views, etc. 8vo, cloth, ... 2 50

GILLMORE. A PRACTICAL TREATISE ON THE CONSTRUCTION OF ROADS, STREETS, AND PAVEMENTS. By Q. A. Gillmore, Lt.-Col. U. S. Engineers, Brevet Major-General U. S. Army. Seventy illustrations. 12mo, clo., 2 00

GILLMORE. REPORT ON STRENGTH OF THE BUILDING STONES IN THE UNITED STATES, etc. 8vo, cloth, ... 1 00

HOLLEY. AMERICAN AND EUROPEAN RAILWAY PRACTICE, in the Economical Generation of Steam. By Alexander L. Holley. B. P. With 77 lithographed plates. Folio, cloth, 12 00

HAMILTON. USEFUL INFORMATION FOR RAILWAY MEN. Compiled by W. G. Hamilton, Engineer. Seventh edition, revised and enlarged. 577 pages. Pocket form, morocco, gilt, ... $2 00

STUART. THE CIVIL AND MILITARY ENGINEERS OF AMERICA. By General Charles B. Stuart, Author of "Naval Dry Docks of the United States," etc., etc. With nine finely-executed Portraits on steel, of eminent Engineers, and illustrated by Engravings of some of the most important and original works constructed in America. 8vo, cloth, ... 5 00

ERNST. A MANUAL OF PRACTICAL MILITARY ENGINEERING. Prepared for the use of the Cadets of the U. S. Military Academy, and for Engineer Troops. By Capt. O. H. Ernst, Corps of Engineers, Instructor in Practical Military Engineering, U. S. Military Academy. 193 wood-cuts and 3 lithographed plates. 12mo, cloth, . . 5 00

SIMMS. A TREATISE ON THE PRINCIPLES AND PRACTICE OF LEVELLING, showing its application to purposes of Railway Engineering and the Construction of Roads, etc. By Frederick W. Simms, C. E. From the fifth London edition, revised and corrected, with the addition of Mr. Law's Practical Examples for Setting-out Railway Curves. Illustrated with three lithographic plates, and numerous wood-cuts. 8vo, cloth, ... 2 50

JEFFERS. NAUTICAL SURVEYING. By William N. Jeffers, Captain U. S. Navy. Illustrated with 9 copperplates, and 31 wood-cut illustrations. 8vo, cloth, ... 5 00

THE PLANE TABLE. ITS USES IN TOPOGRAPHICAL SURVEYING. From the papers of the U. S. Coast Survey. 8vo, cloth, . . 2 00

A TEXT-BOOK ON SURVEYING, PROJECTIONS, AND PORTABLE INSTRUMENTS, for the use of the Cadet Midshipmen, at the U. S. Naval Academy. 9 lithographed plates, and several wood-cuts. 8vo, cloth, . . $2 00

CHAUVENET. NEW METHOD OF CORRECTING LUNAR DISTANCES. By Wm. Chauvenet, LL.D. 8vo, cloth, ... 2 00

BURT. KEY TO THE SOLAR COMPASS, and Surveyor's Companion; comprising all the Rules necessary for use in the Field. By W. A. Burt, U. S. Deputy Surveyor. Second edition. Pocket-book form, tuck, . 2 50

HOWARD. EARTHWORK MENSURATION ON THE BASIS OF THE PRISMOIDAL FORMULÆ. Containing simple and labor-saving method of obtaining Prismoidal Contents directly from End Areas. Illustrated by Examples, and accompanied by Plain Rules for practical uses. By Conway R. Howard, Civil Engineer, Richmond, Va. Illustrated. 8vo, cloth, ... 1 50

MORRIS. EASY RULES FOR THE MEASUREMENT OF EARTHWORKS, by means of the Prismoidal Formulæ. By Elwood Morris, Civil Engineer. 78 illustrations. 8vo, cloth, 1 50

CLEVENGER. A TREATISE ON THE METHOD OF GOVERNMENT SURVEYING, as prescribed by the U. S. Congress and Commissioner of the General Land Office. With complete Mathematical, Astronomical, and Practical Instructions for the use of the U. S. Surveyors in the Field. By S. V. Clevenger, U. S. Deputy Surveyor. Illustrated. Pocket form, morocco, gilt, ... 2 50

HEWSON. PRINCIPLES AND PRACTICE OF EMBANKING LANDS from River Floods, as applied to the Levees of the Mississipi. By William Hewson, Civil Engineer. 8vo, cloth, ... 2 00

MINIFIE. A TEXT-BOOK OF GEOMETRICAL DRAWING, for the use of Mechanics and Schools. With Illustrations for Drawing Plans, Elevations of Buildings and Machinery. With over 200 diagrams on steel. By William Minifie, Architect. Ninth edition. Royal 8vo, cloth, ... $4 00

MINIFIE. GEOMETRICAL DRAWING. Abridged from the octavo edition, for the use of Schools. Illustrated with 48 steel plates. New edition, enlarged. 12mo, cloth, 2 00

FREE HAND DRAWING. A GUIDE TO ORNAMENTAL, Figure, and Landscape Drawing. By an Art Student. Profusely illustrated. 18mo, boards, ... 50

AXON. THE MECHANIC'S FRIEND. A Collection of Receipts and Practical Suggestions, relating to Aquaria—Bronzing—Cements—Drawing—Dyes—Electricity—Gilding—Glass-working—Glues—Horology—Lacquers—Locomotives—Magnetism—Metal-working—Modelling—Photography—Pyrotechny—Railways—Solders—Steam-Engine—Telegraphy—Taxidermy—Varnishes—Waterproofing—and Miscellaneous Tools, Instruments, Machines, and Processes connected with the Chemical and Mechanical Arts. By William E. Axon, M.R.S.L. 12mo, cloth. 300 illustrations, ... 1 50

HARRISON. MECHANICS' TOOL BOOK, with Practical Rules and Suggestions, for the use of Machinists, Iron Workers, and others. By W. B. Harrison. 44 illustrations. 12mo, cloth 1 50

JOYNSON. THE MECHANIC'S AND STUDENT'S GUIDE in the designing and Construction of General Machine Gearing. Edited by Francis H. Joynson. With 18 folded plates. 8vo, cloth 2 00

RANDALL. QUARTZ OPERATOR'S HAND-BOOK. By P. M. Randall. New Edition. Revised and Enlarged. Fully illustrated. 12mo, cloth, ... $2 00

SILVERSMITH. A PRACTICAL HAND-BOOK FOR MINERS, METALLURGISTS, and Assayers. By Julius Silversmith. Fourth Edition. Illustrated. 12mo, cloth, ... 3 00

BARNES. SUBMARINE WARFARE, DEFENSIVE AND OFFENSIVE. Descriptions of the various forms of Torpedoes, Submarine Batteries and Torpedo Boats actually used in War. Methods of Ignition by Machinery, Contact Fuzes, and Electricity, and a full account of experiments made to determine the Explosive Force of Gunpowder under Water. Also a discussion of the Offensive Torpedo system; its effect upon Iron-clad Ship systems, and influence upon future Naval Wars. By Lieut.-Com. John S. Barnes, U. S. N. With 20 lithographic plates and many wood-cuts. 8vo, cloth, 5 00

FOSTER. SUBMARINE BLASTING, in Boston Harbor, Mass. Removal of Tower and Corwin Rocks. By John G. Foster, U. S. Eng. and Bvt. Major General U. S. Army. With seven Plates. 4to, cloth, 3 50

MOWBRAY. TRI-NITRO-GLYCERINE, as applied in the Hoosac Tunnel, and to Submarine Blasting, Torpedoes, Quarrying, etc. Illustrated. 8vo, cloth, ... 3 00

WILLIAMSON. ON THE USE OF THE BAROMETER ON SURVEYS AND RECONNAISSANCES. Part I.—Meteorology in its Connection with Hypsometry. Part II.—Barometric Hypsometry. By R. S. Williamson, Bvt. Lt.-Col. U.S.A., Major Corps of Engineers. With illustrative tables and engravings. 4to, cloth, ... 15 00

WILLIAMSON. PRACTICAL TABLES IN METEOROLOGY AND HYPSOMETRY, in connection with the use of the Barometer By Col. R. S. Williamson, U. S. A. 4to, flexible cloth, $2 50

BUTLER. PROJECTILES AND RIFLED CANNON A Critical Discussion of the Principal Systems of Rifling and Projectiles, with Practical Suggestions for their Improvement. By Capt. John S. Butler, Ordnance Corps, U. S. A. 36 Plates. 4to, cloth, . . . 7 50

BENET. ELECTRO-BALLISTIC MACHINES, and the Schultz Chronoscope. By Lt.-Col S. V. Benet, Chief of Ordnance U. S. A. Second edition, illustrated. 4to, cloth, . 3 00

MICHAELIS. THE LE BOULENGE CHRONOGRAPH. With three lithographed folding plates of illustrations. By Bvt. Captian O. E. Michaelis, Ordnance Corpse, U. S. A. 4to, cloth, ... 3 00

NUGENT. TREATISE ON OPTICS; or Light and Sight, theoretically and practically treated; with the application to Fine Art and Industrial Pursuits. By E. Nugent. With 103 illustrations. 12mo, cloth, . . . 1 50

PEIRCE. SYSTEM OF ANALYTIC MECHANICS. By Benjamin Peirce, Professor of Astronomy and Mathematics in Harvard University. 4to. cloth, ... 10 00

CRAIG. WEIGHTS AND MEASURES. An Account of the Decimal System, with Tables of Conversion for Commercial and Scientific Uses. By B. F. Craig, M. D. Square 32mo, limp cloth, ... 50

ALEXANDER. UNIVERSAL DICTIONARY OF WEIGHTS AND MEASURES, Ancient and Modern, reduced to the standards of the United States of America. By J. H. Alexander. New edition. 8vo, cloth, . . 3 50

ELLIOT. EUROPEAN LIGHT-HOUSE SYSTEMS. Being a Report of a Tour of Inspection made in 1873. By Major George H. Elliot, U. S. Engineers. 51 engravings and 21 wood-cuts. 8vo, cloth, ... $5 00

SWEET. SPECIAL REPORT ON COAL. By S. H. Sweet. With Maps. 8vo, cloth, . . 3 00

COLBURN. GAS WORKS OF LONDON. By Zerah Colburn. 12mo, boards, ... 60

WALKER. NOTES ON SCREW PROPULSION, its Rise and History. By Capt. W. H. Walker, U. S. Navy. 8vo, cloth, ... 75

POOK. METHOD OF PREPARING THE LINES AND DRAUGHTING VESSELS PROPELLED BY SAIL OR STEAM, including a Chapter on Laying-off on the Mould-loft Floor. By Samuel M. Pook, Naval Constructor. Illustrated. 8vo, cloth, ... 5 00

SAELTZER. TREATISE ON ACOUSTICS in connection with Ventilation. By Alexander Saeltzer. 12mo, cloth, ... 2 00

EASLIE A HAND-BOOK FOR THE USE OF CONTACTORS, Builders, Architects, Engineers, Timber Merchants, etc., with information for drawing up Designs and Estimates. 250 illustrations. 8vo, cloth, ... 1 50

SCHUMANN. A MANUAL OF HEATING AND VENTILATION IN ITS PRACTICAL APPLICATION for the use of Engineers and Architects, embracing a series of Tables and Formulæ for dimensions of heating, flow and return Pipes for steam and hot water boilers, flues, etc., etc. By F. Schumann, C. E., U. S. Treasury Department. 12mo. Illustrated. *In press*

TONER. DICTIONARY OF ELEVATIONS AND CLIMATIC REGISTER OF THE UNITED STATES. By J. M. Toner, M. D. 8vo. Paper, $3.00; cloth. 3 75

WANKLYN. MILK ANALYSIS. A Practical Treatise on the Examination of Milk, and its Derivatives, Cream, Butter, and Cheese. By J. Alfred Wanklyn, M.R.C.S. 12mo, cloth, ... $1 00

RICE & JOHNSON. ON A NEW METHOD OF OBTAINING THE DIFFERENTIALS OF FUNCTIONS, with especial reference to the Newtonian Conception of Rates or Velocities. By J. Minot Rice, Prof. of Mathematics, U. S. Navy, and W. Woolsey Johnson, Prof. of Mathemathics, St. John's College, Annapolis. 12mo, paper. 50

COFFIN. NAVIGATION AND NAUTICAL ASTRONOMY. Prepared for the use of the U. S. Naval Academy. By J. H. C. Coffin, Professor of Astronomy, Navigation and Surveying; with 52 wood-cut illustrations. Fifth edition. 12mo, cloth. . . . 3 50

CLARK. THEORETICAL NAVIGATION AND NAUTICAL ASTRONOMY. By Lewis Clark, Lieut.-Commander, U. S Navy. Illustrated with 41 wood-cuts, including the Vernier. 8vo. cloth, ... 3 00

ROGERS. THE GEOLOGY OF PENNSYLVANIA. By Henry Darwin Rogers, late State Geologist of Pennsylvania. 3 vols. 4to, with Portfolio of Maps. Cloth, ... 30 00

IN PREPARATION.

WEISBACH. MECHANICS OF ENGINEERING, APPLIED MECHANICS; containing Arches, Bridges, Foundations, Hydraulics, Steam Engine, and other Prime Movers, &c., &c. Translated from the latest German Edition 2 vols., 8vo.

VAN NOSTRAND'S

ENGINEERING MAGAZINE.

LARGE 8VO, MONTHLY

Terms, $5.00 per annum, in advance.

Single Copies, 50 *Cents*.

First Number was issued January 1, 1869.

VAN NOSTRAND'S MAGAZINE consists of Articles, Original and Selected, as also Matter condensed from all the Engineering Serial Publications of Europe and America.

NINETEEN VOLUMES NOW COMPLETE.

NOTICE TO NEW SUBSCRIBERS.—Persons commencing their subscriptions with the Twentieth Volume (January, 1878), and who are desirous of possessing the work from its commencement, will be supplied with Volumes I to XIX, inclusive, neatly bound in cloth, for $50 00 Half morocco, $78 00 Sent free by mail or express on receipt of price.

NOTICE TO CLUBS.—An extra copy will be supplied, gratis, to every Club of five subscribers, at $5.00 each, sent in one remittance.

This magazine is made up of copious reprints from the leading scientific periodicals of Europe, together with original articles. It is extremely well edited and cannot fail to prove a valuable adjunct in promoting the engineering skill of this country.—*New York World*.

No person intererested in any of the various branches of the engineering profession can afford to be without this magazine.—*Telegrapher*.

The most useful engineering periodical extant, at least for American readers.—*Chemical News*.

As an abstract and condensation of current engineering literature this magazine will be of great value, and as it is the first enterprise of the kind in this country, it ought to have the cordial support of the engineering profession and all interested in mechanical or scientific progress.—*Iron Age*.

IN PRESS.

THE BRIDGES OF NORTH AMERICA,

BEING A COMPARISON OF THE

AMERICAN AND EUROPEAN SYSTEMS,

Translated from the French of

L. A. CAMOLLI, C. E.

BY

S. H. SHREVE, A. M., C. E.

Author of "A Treatise on the Strength of Bridges and Roofs."
Consulting Engineer on the Construction of the Metropolitan Elevated Railroad.

D. VAN NOSTRAND, Publisher,

23 Murray Street, New York.

IN PRESS.

THE

FIELD ENGINEER.

A HANDY BOOK OF PRACTICE

IN THE

Survey, Location and Track-work

OF

RAILROADS.

Containing a large collection of Rules and Tables, original and selected, applicable to both the Standard and the Narrow Gauge, and prepared with special reference to the wants of the Young Engineer.

BY

WILLIAM FINDLAY SHUNK, C. E.,

Chief Engineer of the Construction of the Metropolitan Elevated Railway, N. Y.

D. VAN NOSTRAND, Publisher,

23 Murray & 27 Warren Sts., N. Y.

THE VAN NOSTRAND SCIENCE SERIES.

No. 44.—TURBINE WHEELS. By Prof. W. P. Trowbridge.

No. 45.—THERMODYNAMICS. By Prof H. T. Eddy.

No. 46.—ICE-MAKING MACHINES. From the French of M. Le Doux.

No. 47.—LINKAGES; the Different Forms and Uses of Articulated Links. By J. D. C. De Roos.

No. 48.—THEORY OF SOLID AND BRACED ARCHES. By Wm. Cain, C. E.

No. 49.—ON THE MOTION OF A SOLID IN A FLUID. By Thomas Craig, Ph. D.

No. 50.—DWELLING HOUSES; their Sanitary Construction and Arrangements. By Prof. Wm. H. Corfield.

No. 51.—THE TELESCOPE: Its Construction, &c. By Thomas Nolan.

No. 52.—IMAGINARY QUANTITIES. Translated from the French of M. Argand. By Prof. Hardy.

No. 53.—INDUCTION COILS: How Made and How Used. 3d Edition.

No. 54.—KINEMATICS OF MACHINERY. By Prof. Kennedy. With an introduction by Prof. Thurston.

No. 55.—SEWER GASES. By A. De Varona.

No. 56.—THE ACTUAL LATERAL PRESSURE OF EARTHWORK. By Benj. Baker, M. Inst. C. E.

No. 57.—INCANDESCENT ELECTRIC LIGHTS, By Compte Th. Du Moncel and Wm. Henry Preece. 2d Edition.

No. 58.—THE VENTILATION OF COAL MINES. By W. Fairley, M. E., F. S. S.

No. 59.—RAILROAD ECONOMICS; or Notes, with Comments. By S. W. Robinson, C. E.

No. 60.—STRENGTH OF WROUGHT IRON BRIDGE MEMBERS. By S. W. Robinson, C. E.

No. 61.—POTABLE WATER, and the Different Methods of Detecting Impurities. By Chas. W. Folkard.

No. 62.—THE THEORY OF THE GAS ENGINE. By Dugald Clerk.

No. 63.—HOUSE DRAINAGE AND SANITARY PLUMBING. By W. P. Gerhard. 2d Edition.

No. 64.—ELECTRO-MAGNETS. By Th. du Moncel.

No. 65.—POCKET LOGARITHMS TO FOUR PLACES OF DECIMALS.

No. 66.—DYNAMO-ELECTRIC MACHINERY. By Silvanus P. Thompson.

No. 67.—HYDRAULIC TABLES. By P. J. Flynn, C. E.

No. 68.—STEAM HEATING. By Robert Briggs.

No. 69.—CHEMICAL PROBLEMS. By Prof. Foye. 3d Ed.

No. 70.—EXPLOSIVE MATERIALS. By M. P. E. Berthelot.

No. 71.—DYNAMIC ELECTRICITY. By John Hopkinson, J. A. Schoolbred and R. E. Day.

89090525015

b89090525015a